Open In Door_Low Threshold (Rebate)

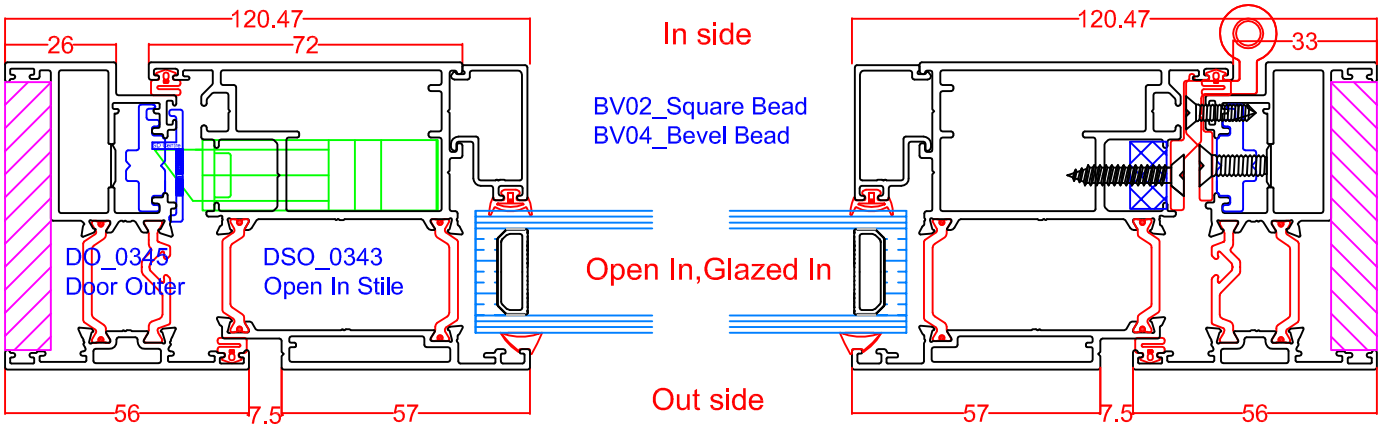

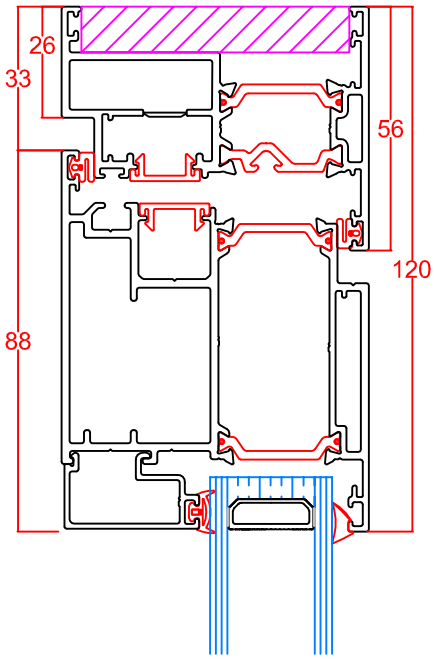

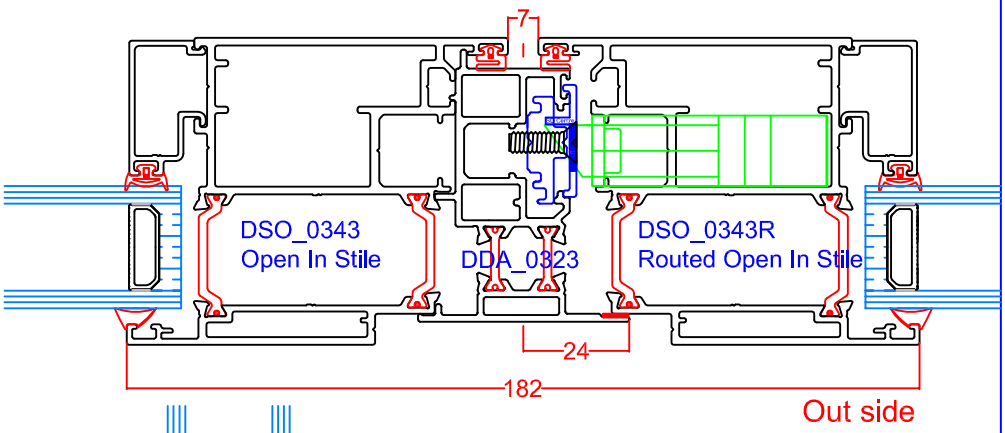

In side

Out side

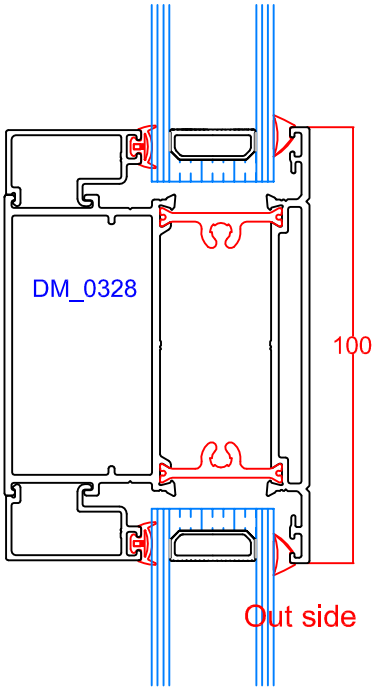

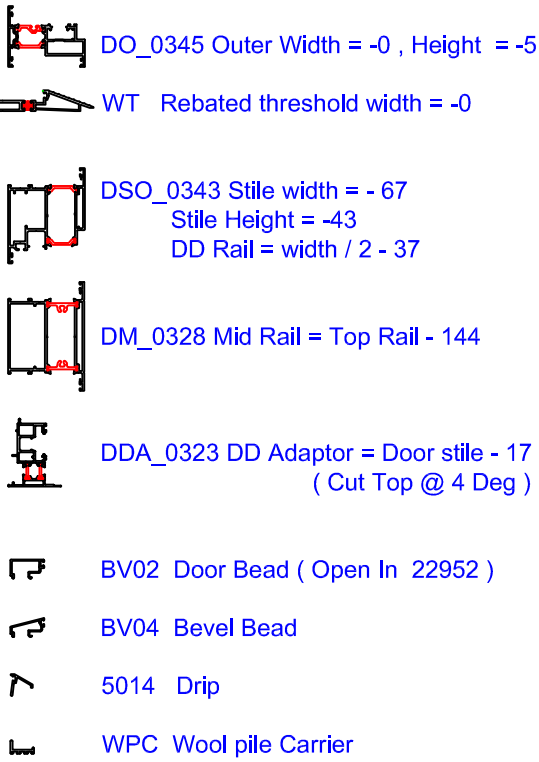

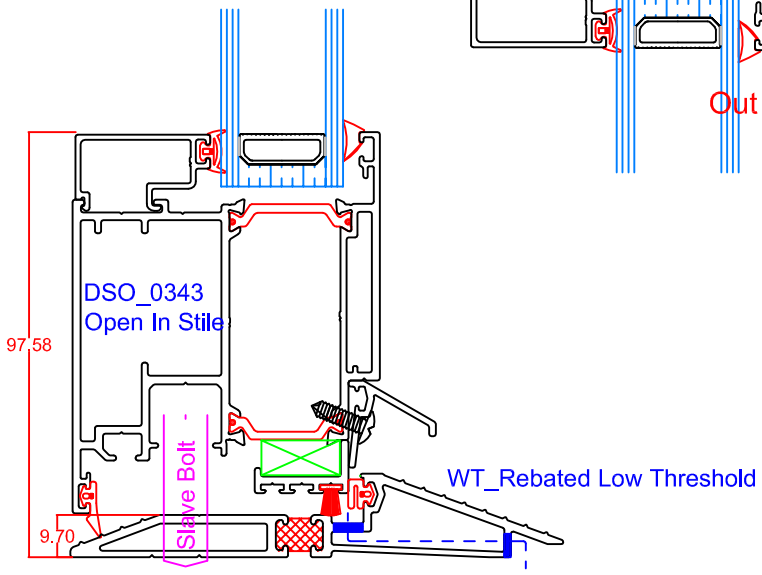

Open In - Rebated Low threshold

Glass width = -217
Full Glass Height = -195
Top Glass = Height - midrail from bottom -147
Bottom Glass = Mid rail from bottom - 124
DD Glass Width = Width / 2 - 188